BTU AREA #X-05
CP AREA # T-197-A
WALL MAP 2812
PLAT 2812: J1
SAN JOAQUIN COUNTY

DFM 1624-01 PCF REPLACEMENTS
COUNTY OF SAN JOAQUIN

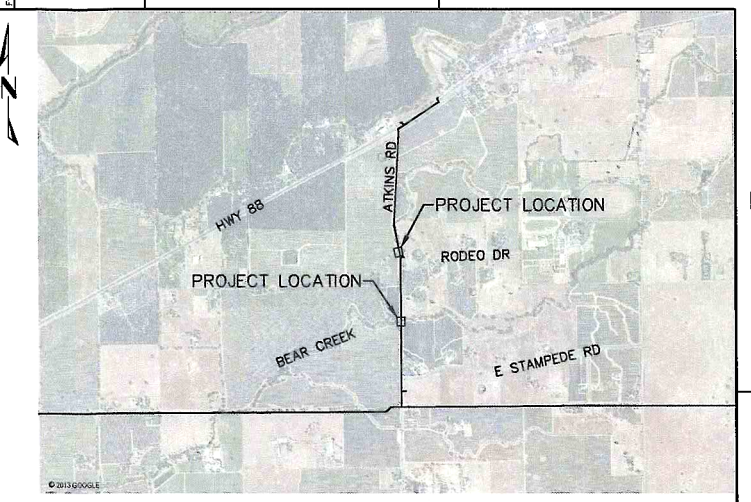

SAN JOAQUIN COUNTY, CA VICINITY MAP
NOT TO SCALE

SCHEDULE OF SHEETS

SHEET 1.....COVER SHEET
SHEET 2,3.....STAMPS / CONSTRUCTION NOTES
SHEET 4,5.....CONSTRUCTION DETAILS
SHEET 6.....BILLS OF MATERIAL, TYPICAL DETAILS, & CTS/ETS DETAILS

REFERENCE DRAWINGS:

GM 462916.....REPLACE 2" H.P. GAS MAIN TO CLEAR NEW BRIDGE CONSTRUCTION AT BEAR CREEK & ATKINS RD, BRIDGE #1507 LODI UNINC. – SAN JOAQUIN COUNTY (MAOP10269255). SHT 2 OF 2
WO 4083-H.....REPLACE 2" H.P. GAS MAIN TO CLEAR NEW BRIDGE CONSTRUCTION AT BEAR CREEK & ATKINS RD, BRIDGE #1507 LODI UNINC. – SAN JOAQUIN COUNTY (MAOP15300477). SHT 2 OF 2
GM 161277.....GAS TRANSMISSION AND DISTRIBUTION MAINS TO SERVE CLEMENTS (MAOP00213806). SHT 1 OF 4

COPY

SAFETY
SAFETY PLEDGE
I ALWAYS PUT SAFETY FIRST.
I LOOK FOR AND ACT TO RESOLVE UNSAFE SITUATIONS.
I HELP AND ENCOURAGE OTHERS TO ACT SAFELY.

GTS
575 Lennon Ln. #250
Walnut Creek, CA (925) 478-8530
www.gtsinc.us
Project No. 13250

REGISTERED PROFESSIONAL ENGINEER
MARK A. CABRAL
No. M26602
Exp. 9-30-14
MECHANICAL
STATE OF CALIFORNIA

UNDERGROUND SERVICE ALERT USA
CALL BEFORE YOU DIG.
CALL: 811

NOTIFIED U.S.A.
DATE TICKET NO. BY

WELDING INSPECTED PER PG&E GAS STANDARD D-40
VISUAL ☐
MAGNETIC PARTICLE ☐
INSPECTOR
DATE

NOTE:
WARNING: CONFIDENTIAL, PROPRIETARY INFORMATION THIS DOCUMENT CONTAINS CONFIDENTIAL, PROPRIETARY INFORMATION THAT IS THE SOLE PROPERTY OF PACIFIC GAS AND ELECTRIC COMPANY AND IS INTENDED FOR USE ONLY BY AUTHORIZED PACIFIC GAS AND ELECTRIC COMPANY EMPLOYEES & AGENTS. COPYRIGHT PACIFIC GAS AND ELECTRIC COMPANY.

NO.	DATE	DESCRIPTION	GM/SPEC	DWN	CHKD	SUPV	APVD BY
0	11/21/13	ISSUED FOR CONSTRUCTION	31033842	MJM		RAA	MAC

REVISIONS

APPROVED BY	GM 31033842
RAA	SUPV
	DSGN
	DWN MJM
	CHKD RAA
	OK MAC MAC
	DATE 11-21-13
MAC	SCALES AS SHOWN

PSRS# 32174

PIPING – COVER SHEET
REPLACE 4 PCF's @ BEAR CREEK
DFM 1624-01, MP'S 0.36, 0.38, 0.64, 0.66
LOCKEFORD, CALIFORNIA

PACIFIC GAS AND ELECTRIC COMPANY
SAN RAMON, CALIFORNIA

BILL OF MATL SHEET 06	
DWG LIST	
SUPSDS	
SUPSD BY	
SHEET NO. 01 OF 06 SHEETS	
31033842	0

CONTACT INFORMATION:

CONSTRUCTION MANAGER..... MARK HODGSON (925) 708-7328
PROJECT ENGINEER..... MARK CABRAL (925) 588-3640
ENGINEER..... RICHARD AVERY (510) 331-8821
PG&E PIPELINE ENGINEER..... WAYNE GILBERT (925) 551-1849
T&R SUPERVISOR..... DAVID DURHAM (925) 383-6468
PROJECT MANAGER..... CESAR URENO (925) 324-4279

SUMMARY OF PROPOSED WORK:

1. INSTALL FOUR (4) 2" MUELLER PCF'S AND TEMPORARY BYPASS.
2. INSTALL 5'-4" OF NEW 2.375"OD x 0.154"WT, API 5L, GR B, SMLS PIPE.
3. REMOVE 4 EXISTING PCF'S AND 5'-4" OF 2.375"OD x 0.154"WT, API 5L, GR B, SMLS PIPE INSTALLED ON GM 462916 (1971) & WO 4083-H (1971).
4. NITROGEN TEST 2" PIPE IN TIE-IN JOINT TEST LOOP FOR DFM 1624-01 AT MP 0.36, 0.38, 0.64 & 0.66.
5. TIE-IN TESTED PIPE SECTIONS INTO DFM 1624-01.

SEQUENCE OF OPERATIONS

OPERATING MAP #385163 SHT 1 OF 1

1. PRIOR TO TAKING PIPELINE CLEARANCE THE FOLLOWING MUST BE PERFORMED:

A. PG&E T&R TO CHECK ANY DRIPS IN SHUT-IN SEGMENT FOR PRESENCE OF PIPELINE LIQUIDS.
B. COMPLETE A-FORMS ON ALL EXPOSED PIPE AND INCLUDE IN AS-BUILT PACKAGE.
C. G.C. GAS TO INSTALL SAVE-A-VALVES FOR OIL TESTING AND SNIFF HOLES WHERE DESIGNATED IN THE TIE-IN PROCEDURE. G.C. GAS FOREMAN TO CONFIRM LOCATION AND NUMBER OF SAVE-A-VALVE LOCATIONS AND ENSURE WELD PRESSURE CALCULATIONS ARE PROVIDED BY ENGINEERING PRIOR TO WELDING SAVE-A-VALVES ON PIPELINE.

2. INSTALL MEULLER H-17156 PCF'S AND FLEX HOSE BYPASS.
3. LOWER PRESSURE IN DFM 1624-01 TO 350 PSIG, AS MUELLER PCF'S HAVE MAX STOPPING PRESSURE OF 350 PSIG.
4. STRENGTH TEST, PURGE AND DRY TIE-IN JOINT.
5. REMOVE 4 EXISTING UNDER RATED 2" PCF'S AND INSTALL PRE-TESTED TIE-IN JOINTS.
6. INSTALL ETS, CATS AND PIPELINE WARNING SIGNS/MARKERS.
7. RESTORE ROADS AND CONSTRUCTION CORRIDOR.

Installation Tested or Inspected and Noted on Drawing. All Levels Satisfactory per PG&E GS&S 0-16

Qualified Employee _____ Date _____

Corrosion mechanic's signature is required when a CPA boundary is within the scope of the project

ENVIRONMENTAL ISSUES

☐ NONE APPARENT (IF PROJECT DESIGN CHANGES, CONTACT RESPONSIBLE ENGR)

☐ PERMITS ☐ TAILBOARD ☐ OTHER

☐ APPLICANT DESIGN/RESPONSIBILITY (CHECK PERMITS BOX IF PERMIT CONDITIONS APPLY TO PG&E ACTIONS)

BY: _____
Signature, name, [Corporate ID], date

DESIGN & CONSTRUCTION REVIEW FOR INTERNAL CORROSION

DESCRIPTION	ACTION SELECTED	INITIAL	DATE
CORROSION ENGINEER HAS REVIEWED THIS LOCATION AND THERE IS NO KNOWN THREAT OF INTERNAL CORROSION. NO INTERNAL CORROSION DESIGN OR CONSTRUCTION CONSIDERATIONS ARE NECESSARY.			
INTERNAL CORROSION MAY BE A THREAT AND THE CONSTRUCTION DESIGNS HAVE BEEN REVIEWED WITH CORROSION ENGINEERING. DOCUMENTATION OF THE REVIEW AND ACTIONS TAKEN ARE IN THE JOB PACKAGE AND INCORPORATED IN THIS DESIGN.			

DIRECT BURIAL COATING SELECTIONS
LISTED IN ORDER OF PREFERENCE

MAIN LINE COATING	FBE
MINOR REPAIRS	PROTAL 7200, POWERCRETE J
TIE-IN WELDS	PROTAL 7200, POWERCRETE J
GIRTH WELDS	PROTAL 7200, POWERCRETE J
BUTT WELDED FITTINGS	PROTAL 7200, POWERCRETE J
VALVE ASSEMBLIES	PROTAL 7200, POWERCRETE J
SHORT SEGMENTS OF PIPE	PROTAL 7200, POWERCRETE J
AIR-TO-SOIL TRANSITIONS	DEVGRIP 238, POWERCRETE J
PRESSURE CONTROL FITTINGS BODY	PROTAL 7200
FLANGE	WAX TAPE

BORED COATING SELECTIONS
LISTED IN ORDER OF PREFERENCE

MAIN LINE COATING	ARC APPLIED OVER FBE
MINOR REPAIRS	PROTAL 7200, POWERCRETE J
GIRTH WELDS	PROTAL 7200, POWERCRETE J

NOTES:
1) CONTACT THE RESPONSIBLE PIPELINE ENGINEER TO REQUEST A VARIANCE FROM THE ABOVE COATING SELECTIONS

COPY

SAFETY
SAFETY PLEDGE
I ALWAYS PUT SAFETY FIRST.
I LOOK FOR AND ACT TO RESOLVE UNSAFE SITUATIONS.
I HELP AND ENCOURAGE OTHERS TO ACT SAFELY.

GTS
575 Lennon Ln. #250
Walnut Creek, CA (925) 478-8530
www.gtsinc.us
Project No. 13250

REGISTERED PROFESSIONAL ENGINEER
MARK A. CABRAL
No. M26602
Exp. 9-30-14
MECHANICAL
STATE OF CALIFORNIA

UNDERGROUND SERVICE ALERT USA
CALL BEFORE YOU DIG
CALL: 811

NOTIFIED U.S.A.
DATE TICKET NO. BY

WELDING INSPECTED PER PG&E GAS STANDARD D-40
VISUAL _____ ☐
MAGNETIC PARTICLE _____ ☐
INSPECTOR _____
DATE _____

NOTE:
WARNING: CONFIDENTIAL, PROPRIETARY INFORMATION
THIS DOCUMENT CONTAINS CONFIDENTIAL, PROPRIETARY INFORMATION THAT IS THE SOLE PROPERTY OF PACIFIC GAS AND ELECTRIC COMPANY AND IS INTENDED FOR USE ONLY BY AUTHORIZED PACIFIC GAS AND ELECTRIC COMPANY EMPLOYEES & AGENTS. COPYRIGHT PACIFIC GAS AND ELECTRIC COMPANY.

NO.	DATE	DESCRIPTION	GM/SPEC	DWN	CHKD	SUPV	APVD BY
0	11/21/13	ISSUED FOR CONSTRUCTION	31033842	MJM		RAA	MAC

REVISIONS

APPROVED BY	GM 31033842
RAA	SUPV
	DSGN
	DWN MJM
	CHKD RAA
	OK MAC MAC
	DATE 11-21-13
MAC	SCALES AS SHOWN

PIPING - CONSTRUCTION NOTES
REPLACE 4 PCF's @ BEAR CREEK
DFM 1624-01, MP'S 0.36, 0.38, 0.64, 0.66
LOCKEFORD, CALIFORNIA

PACIFIC GAS AND ELECTRIC COMPANY
SAN RAMON, CALIFORNIA

BILL OF MATL SHEET 06	
DWG LIST	
SUPSDS	
SUPSD BY	
SHEET NO. 02 OF 06 SHEETS	
31033842	0

GENERAL REQUIREMENTS:

1. CALL 811 (1-800-227-2600) A MINIMUM OF 2 BUSINESS DAYS (NOT INCLUDING INITIAL DAY OF CONTACT) IN ADVANCE BEFORE YOU DIG, GRADE, OR EXCAVATE FOR THE MARKING OF UNDERGROUND UTILITIES.

2. UTILITY NOTES:
   A. EXISTING UTILITIES AS SHOWN ON THESE DRAWINGS ARE FROM THE BEST AVAILABLE INFORMATION. THE CONTRACTOR IS RESPONSIBLE FOR VERIFYING THE LOCATION OF ALL UTILITIES THAT MAY BE IMPACTED BY THE PROJECT.
   B. THE INFORMATION SHOWN ON THIS DRAWING CONCERNING TYPE AND LOCATION OF UNDERGROUND AND OTHER UTILITIES IS NOT GUARANTEED TO BE ACCURATE OR ALL INCLUSIVE. THE CONTRACTOR IS RESPONSIBLE FOR MAKING ALL DETERMINATIONS AS TO THE TYPE AND LOCATION OF UNDERGROUND AND OTHER UTILITIES AS MAY BE NECESSARY TO AVOID DAMAGE.
   C. PROSPECTING IS REQUIRED AHEAD OF WORK. ALL OFFSETS OR ROPING WILL NEED TO BE APPROVED BY PG&E ENGINEER, AND AS-BUILT DETAILS SHOWN ON PROFILE AND CONSTRUCTION DETAIL SHEETS.

3. ELBOWS AND FIELD BENDS:
   A. ALL BENDS ARE SMOOTH FIELD BENDS, EXCEPT WHERE ELBOWS ARE SHOWN.FIELD BENDS SHALL BE MADE IN ACCORDANCE WITH GAS STANDARD A-36 SECTION 4-D.
   B. IN ORDER TO AVOID EXCESSIVE STRAIN ON THE PIPELINE, THERE SHALL BE A MINIMUM SEPARATION OF 5' BETWEEN A ROPED SECTION OF PIPELINE AND ANY ELBOWS OR FIELD BENDS C. ALL ANGLES SHOWN IN THE PLAN AND PROFILE ARE APPROXIMATE AND SHALL BE CUT TO SUIT FIELD CONDITION.

4. SEPARATION FROM OTHER STRUCTURES:
   A. CROSSING UNDERGROUND FACILITIES: THIS PIPELINE MUST BE INSTALLED WITH AT LEAST 24 INCHES OF CLEARANCE FROM ANY OTHER UNDERGROUND STRUCTURE/UTILITY NOT ASSOCIATED WITH THE PIPELINE UNLESS NOTED ON THE DRAWINGS.
   B. PARALLELING UNDERGROUND FACILITIES: THIS PIPELINE MUST BE INSTALLED WITH AT LEAST 5 FEET OF CLEARANCE FROM ANY OTHER UNDERGROUND STRUCTURE/UTILITY NOT ASSOCIATED WITH THE PIPELINE UNLESS NOTED ON THE DRAWINGS.

5. RESTORATION AND CLEAN UP:
   A. RESTORATION OF PUBLIC STREETS, SIDEWALKS, CURBS, ETC. ABOVE PIPE BEDDING SHALL BE IN ACCORDANCE WITH THE LATEST CITY STANDARDS.
   B. WHEREVER THERE ARE ROW CROPS, THE TOPSOIL SHALL BE REMOVED TO A DEPTH OF 12" AND STORED ON SITE. UPON COMPLETION OF CONSTRUCTION, THE TOPSOIL SHALL BE RESTORED. TAKE CARE TO PREVENT MIXING OF TOPSOIL AND SUBSOIL.

6. EXISTING TIE-IN WELDS SHALL BE IDENTIFIED AND REMOVED IF PRACTICAL.

7. WELDING REQUIREMENTS:
   A. ALL ARC WELDING IS TO BE PERFORMED IN ACCORDANCE WITH GAS STANDARDD-22. ALL CANS OR SPOOLS SHALL BE A MINIMUM LENGTH OF ONE PIPE DIAMETER, WHENEVER POSSIBLE.
   B. INSTALL TEST STATIONS WITH THERMITE WELD CONNECTION IN ACCORDANCE WITH GAS T & D MANUAL O-10, O-10.1 AND O-10.2.

8. WELDING VALVES AND FITTINGS:
   WHEN 16" AND LARGER VALVES AND FITTINGS ARE WELDED TO EACH OTHER OR TO PIPE, THE JOINT SHALL HAVE A TWO PASS WELD ON THE INSIDE, AS WELL AS THE OUTSIDE WELD, IF THE INTERNAL MISALIGNMENT EXCEEDS 0.094". THIS REQUIREMENT ALSO APPLIES TO SMALLER DIAMETER VALVES AND FITTINGS WHEN IT IS PRACTICAL.

9. STRENGTH TEST REQUIREMENTS:
   A. STRENGTH TESTING SHALL MEET PRESSURE AND DURATION REQUIREMENTS OF GAS STANDARD A-34 AND SHALL BE CONDUCTED IN ACCORDANCE WITH GAS STANDARDS TD-4137S, TD-4137P-01, TD-4137P-03, & TD-4137P-04.
   B. ALL WELDS THAT HAVE NOT BEEN HYDRO TESTED AND ALL FITTINGS SHALL BE SOAP TESTED AT 100 PSIG AND AT OPERATING PRESSURE.

10. PAINTING AND COATING REQUIREMENTS:
   A. ALL EXPOSED PIPE AND FITTINGS ARE TO BE PAINTED IN ACCORDANCE WITH GAS STANDARD E-30. ALL COATING ON BURIED PIPE AND FITTINGS ARE TO BE APPLIED IN ACCORDANCE WITH GAS STANDARD E-35.
   B. FOR COATING SELECTIONS ON BURIED PIPE SEE DIRECT BURIAL COATING SELECTIONS TABLE.

COATING REMOVAL:

BEFORE REMOVING THE PIPE COATING ON PRE-1972 PIPE (DOES NOT INCLUDE PLASTIC TAPE OR FUSION BONDED EPOXY COATINGS) THE FOLLOWING STEPS SHALL BE TAKEN:

- FOR ALL NON-EMERGENCY WORK, PRE-1972 PIPE WRAP MUST BEEVALUATED TO DETERMINE IF IT CONTAINS ASBESTOS PRIOR TO REMOVAL.
- FOR EMERGENCY WORK ON PRE-1972 PIPE, ASSUME THE WRAP CONTAINS >1% ASBESTOS UNTIL THE WRAP CAN BE TESTED.
- OBTAIN SAMPLES OF THE WRAP, AND HAVE SAMPLES TESTED FOR ASBESTOS IN ACCORDANCE WITH RP 4711.
- TEST RESULTS ARE TO BE INCLUDED WITH AS-BUILTS.
- FOLLOW PROCEDURE IN WP 4711-01 FOR REMOVAL OF PIPE WRAP.

CATHODIC PROTECTION NOTES:

1. IN ORDER THAT THE CP DEPARTMENT CAN CONDUCT A REVIEW OF THE INTERNAL CONDITION OF THE PIPELINE, APPROXIMATELY TWO DAYS PRIOR TO THE TIE-IN, NOTIFY BRYON WINGET AT 925-324-3602 OR BILL GRAVES AT 805-423-7924 IN THE CP DEPARTMENT.

2. UPON COMPLETETION OF BORED CROSSINGS AND PRIOR TO WELDING PIPE ON EITHER SIDE OF THE BORE, CONTACT BRYON WINGET AT 925-324-2602 OR BILL GRAVES AT 805-423-7924, TO PERFORM CURRENT DRAIN TESTS ON THE PIPELINE SEGMENT THAT WAS INSTALLED IN THE BORE.

3. AFTER INSTALLATION OF OMNIMETRIX RECTIFIER REMOTE MONITOR, AND PRIOR TO ENERGIZING THE RECTIFIER, CONTACT BRYON WINGET AT 925-324-2602 OR BILL GRAVES AT 805-423-7924 IN THE CP DEPARTMENT.

DEACTIVATION PROCEDURE FOR EXISTING PIPE:

1. GT&D UTILITY WORK PROCEDURE TD 9500P-16 SHALL BE FOLLOWED.

2. THE EXISTING PIPELINE SHALL BE 100% PURGED WITH NITROGEN PER STANDARD A-38.

3. AT INTERVALS SPECIFIED IN TD 9500P-16 THE EXISTING MAIN WILL BE CUT AND PLATED SEE DEACTIVATION SHEET.

4. AT EACH CUT LOCATION , A PIECE OF PIPE AT LEAST 24" LONG SHALL BE REMOVED. THE OPEN ENDS OF DEACTIVATED MAIN SHALL BE SEALED BY THE MOST APPROPRIATE METHOD OUTLINED IN GT&D UTILITY WORK PROCEDURE TD 9500P-16. BACKFILL MUST BE THOROUGHLY COMPACTED IN PLACE OF THE REMOVED SECTION OF PIPE.

5. SERVICE CONNECTIONS TO BE DEACTIVATED AS INDICATED ON THE DRAWINGS SHALL BE CUT AND PLATED.

6. VALVES AND CURB COCKS MAY BE REMOVED AND SALVAGED IF THE COST OF REMOVAL IS JUSTIFIED. THE OPEN ENDS OF PIPE SHALL BE SEALED AS NOTED ABOVE.

GENERAL NOTES:

1. ALL FIELD CHANGES REQUIRE APPROVAL BY PROJECT ENGINEER, RICHARD AVERY (510) 331-8821

TIE-IN AND CLEARANCE PROCEDURES:

1. TIE-IN AND CLEARANCE PROCEDURE TO BE PREPARED AND PERFORMED IN ACCORDANCE WITH THE FOLLOWING WORK PROCEDURES:

   A. WP4100-01, HOT AND COLD WORK METHODS FOR NATURAL GAS TRANSMISSION PIPELINE SHUTDOWN AND TIE-IN.
   B. WP4100-10, GAS CLEARANCE PROCEDURES FOR FACILITIES OPERATING OVER 60 PSIG.

COPY

SAFETY

SAFETY PLEDGE

I ALWAYS PUT SAFETY FIRST.
I LOOK FOR AND ACT TO RESOLVE UNSAFE SITUATIONS.
I HELP AND ENCOURAGE OTHERS TO ACT SAFELY.

GTS
575 Lennon Ln. #250
Walnut Creek, CA (925) 478-8530
www.gtsinc.us
Project No. 13250

REGISTERED PROFESSIONAL ENGINEER
MARK A. CABRAL
No. M26602
Exp. 9-30-14
MECHANICAL
STATE OF CALIFORNIA

UNDERGROUND SERVICE ALERT USA
CALL BEFORE YOU DIG
CALL: 811

NOTIFIED U.S.A.
DATE TICKET NO. BY

WELDING INSPECTED PER PG&E GAS STANDARD D-40
VISUAL ☐
MAGNETIC PARTICLE ☐
INSPECTOR
DATE

NOTE:
WARNING: CONFIDENTIAL, PROPRIETARY INFORMATION
THIS DOCUMENT CONTAINS CONFIDENTIAL, PROPRIETARY INFORMATION THAT IS THE SOLE PROPERTY OF PACIFIC GAS AND ELECTRIC COMPANY AND IS INTENDED FOR USE ONLY BY AUTHORIZED PACIFIC GAS AND ELECTRIC COMPANY EMPLOYEES & AGENTS. COPYRIGHT PACIFIC GAS AND ELECTRIC COMPANY.

NO.	DATE	DESCRIPTION	GM/SPEC	DWN	CHKD	SUPV	APVD BY
0	11/21/13	ISSUED FOR CONSTRUCTION	31033842	MJM		RAA	MAC

REVISIONS

APPROVED BY	GM 31033842
RAA	SUPV
	DSGN
	DWN MJM
	CHKD RAA
	QK MAC MAC
	DATE 11-21-13
MAC	SCALES AS SHOWN

PIPING - CONSTRUCTION NOTES
REPLACE 4 PCF's @ BEAR CREEK
DFM 1624-01, MP'S 0.36, 0.38, 0.64, 0.66
LOCKEFORD, CALIFORNIA

PACIFIC GAS AND ELECTRIC COMPANY
SAN RAMON, CALIFORNIA

BILL OF MATL SHEET 06
DWG LIST
SUPSDS
SUPSD BY
SHEET NO. 03 OF 06 SHEETS
31033842 0

LOCATION A

ATKINS RD SOUTH OF RODEO DR
WALL MAP – 2812; PLAT – J1; BLOCK – 3; MP – 0.36 & 0.38
(SCALE: 1" = 60')

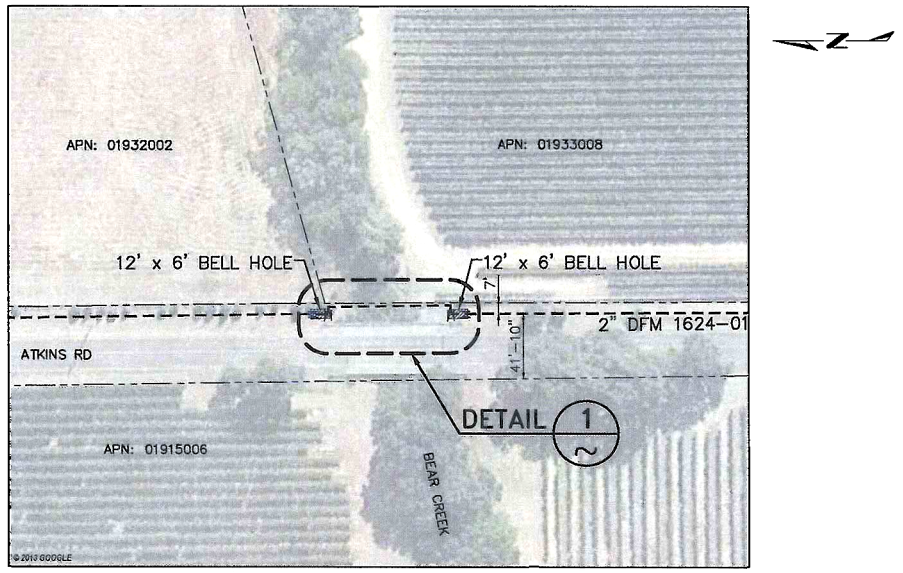

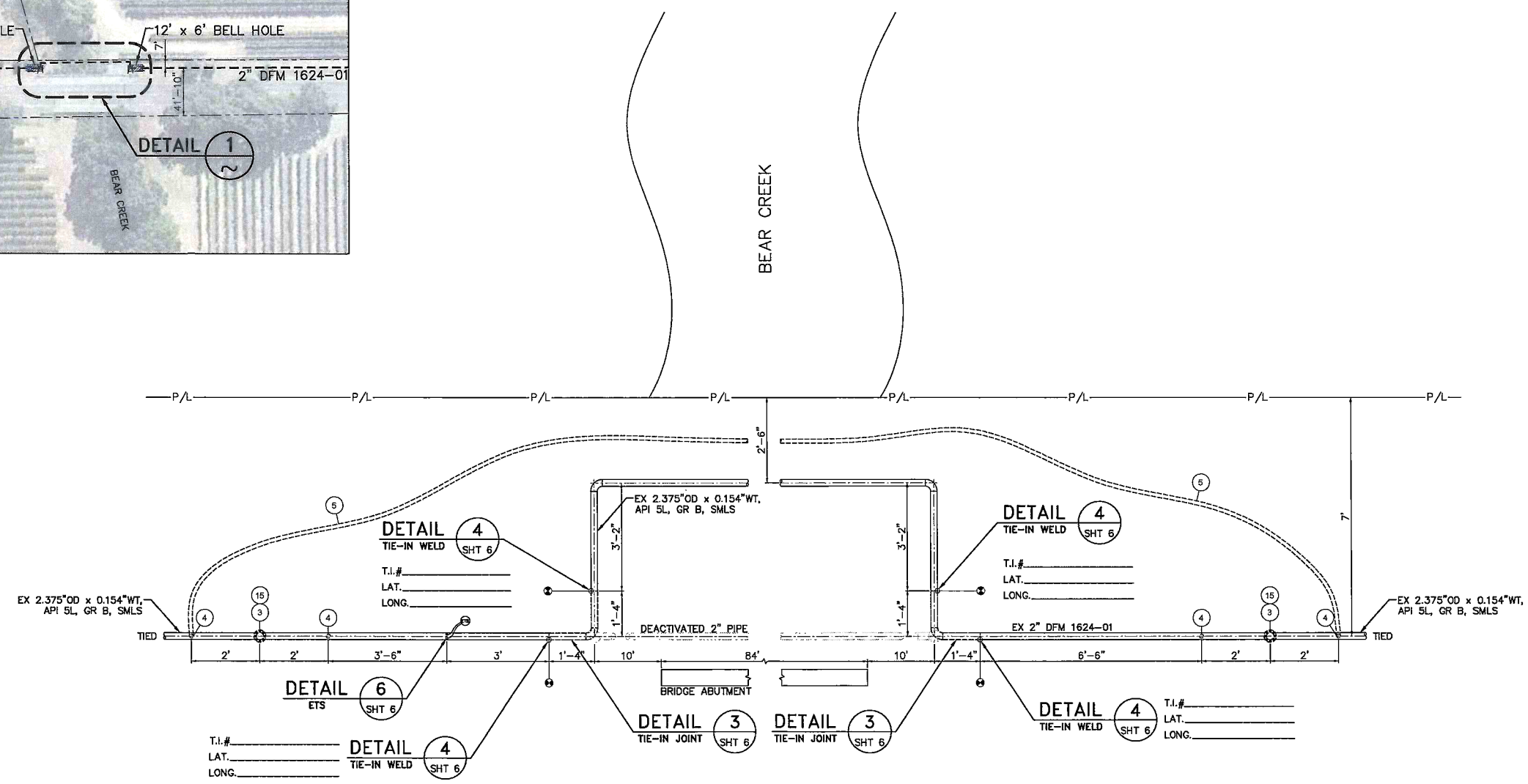

DETAIL 1 (SCALE: 1/2" = 1') DFM 1624-01 PCF REMOVAL & REPLACEMENT
ATKINS RD SOUTH OF RODEO DR

JOB NO. 31033842
BOM # 1

DESIGN CRITERIA
LOCATION CLASS 2
DESIGN FACTOR 0.60
FDP 720 PSIG 15.86 % SMYS
MAOP 720 PSIG 15.86 % SMYS
STRENGTH TEST PRESSURE
MAX. 1784 PSIG 39.30 % SMYS
MIN. 1584 PSIG 34.90 % SMYS
4085 PSIG=90% SMYS
TEST MEDIUM NITROGEN
PIPE SPEC API 5L, GR B, SMLS
O.D. 2.375"
W.T. 0.154"
WELD INSPECTION (GAS STD.D-40)*
☐ RADIOGRAPHIC:
☐ 20% MIN. (% OF EACH WELDER'S DAILY WORK)
☐ 100%
*VISUALLY INSPECT 100% OF ALL WELDS THAT ARE NOT RADIOGRAPHICALLY INSPECTED. (THIS REQUIREMENT APPLIES EVEN IF NO RADIOGRAPHIC INSPECTION IS REQUIRED.)

WO 4083-H (1971)

EXIST PIPE SPECS
HEADER SIZE: 2.375"
PIPE SPECS: API 5L, GR B, SMLS
WALL THICKNESS: 0.154"
PRESENT MAOP: 388
% SMYS @ MAOP: 8.55
MAXIMUM ALLOWABLE PRESSURE DURING WELDING (G.S.&S. D-22) EVALUATE THE FOLLOWING (OPERATING PRESSURE) AND ENTER THE LOWEST OF THE MAXIMUM OPERATING PRESSURE PERMITTED DURING WELDING A) (388 PSIG) WHEN WELDING ON BODY OF THE PIPE, UNLESS: B) (388 PSIG) WHEN WELDING WITHIN 3" OF THE LONGITUDINAL SEAM (EXCEPT SEAM BUTT WELD), CIRCUMFERENTIAL, AND ANY BRANCH WELD, OR WITHIN 3" OF ANY DEFECT (GOUGES, CORROSION, ETC.) WHICH EXCEEDS 1/4 OF THE NOMINAL WALL THICKNESS IN DEPTH AND/OR 1/4 OF THE NOMINAL PIPE DIAMETER IN LENGTH.

COPY

SAFETY
SAFETY PLEDGE
I ALWAYS PUT SAFETY FIRST.
I LOOK FOR AND ACT TO RESOLVE UNSAFE SITUATIONS.
I HELP AND ENCOURAGE OTHERS TO ACT SAFELY.

GTS
575 Lennon Ln. #250
Walnut Creek, CA (925) 478-8530
www.gtsinc.us
Project No. 13250

REGISTERED PROFESSIONAL ENGINEER
MARK A. CABRAL
No. M26602
Exp. 9-30-14
MECHANICAL
STATE OF CALIFORNIA

UNDERGROUND SERVICE ALERT USA CALL BEFORE YOU DIG.
CALL: 811

NOTIFIED U.S.A.
DATE TICKET NO. BY

WELDING INSPECTED PER PG&E GAS STANDARD D-40
VISUAL ☐
MAGNETIC PARTICLE ☐
INSPECTOR
DATE

NOTE:
WARNING: CONFIDENTIAL, PROPRIETARY INFORMATION
THIS DOCUMENT CONTAINS CONFIDENTIAL, PROPRIETARY INFORMATION THAT IS THE SOLE PROPERTY OF PACIFIC GAS AND ELECTRIC COMPANY AND IS INTENDED FOR USE ONLY BY AUTHORIZED PACIFIC GAS AND ELECTRIC COMPANY EMPLOYEES & AGENTS. COPYRIGHT PACIFIC GAS AND ELECTRIC COMPANY.

NO.	DATE	DESCRIPTION	GM/SPEC	DWN	CHKD	SUPV	APVD BY
0	11/21/13	ISSUED FOR CONSTRUCTION	31033842	MJM		RAA	MAC

REVISIONS

APPROVED BY	GM 31033842
RAA	SUPV
	DSGN
	DWN MJM
	CHKD RAA
	OK MAC MAC
	DATE 11-21-13
MAC	SCALES AS SHOWN

PIPING – SECTIONS & DETAILS
REPLACE 4 PCF's @ BEAR CREEK
DFM 1624-01. MP'S 0.36, 0.38, 0.64, 0.66
LOCKEFORD, CALIFORNIA

PACIFIC GAS AND ELECTRIC COMPANY
SAN RAMON, CALIFORNIA

BILL OF MATL SHEET 06
DWG LIST
SUPSDS
SUPSD BY
SHEET NO. 04 OF 06 SHEETS
31033842 0

LOCATION B

ATKINS RD NORTH OF RODEO DR

WALL MAP – 2812; PLAT – J1; BLOCK – 3; MP – 0.64 & 0.66

(SCALE: 1" = 60')

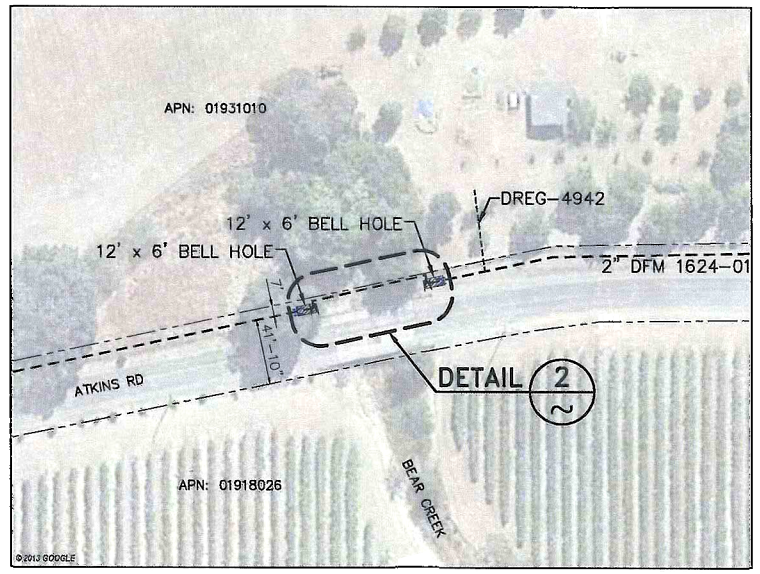

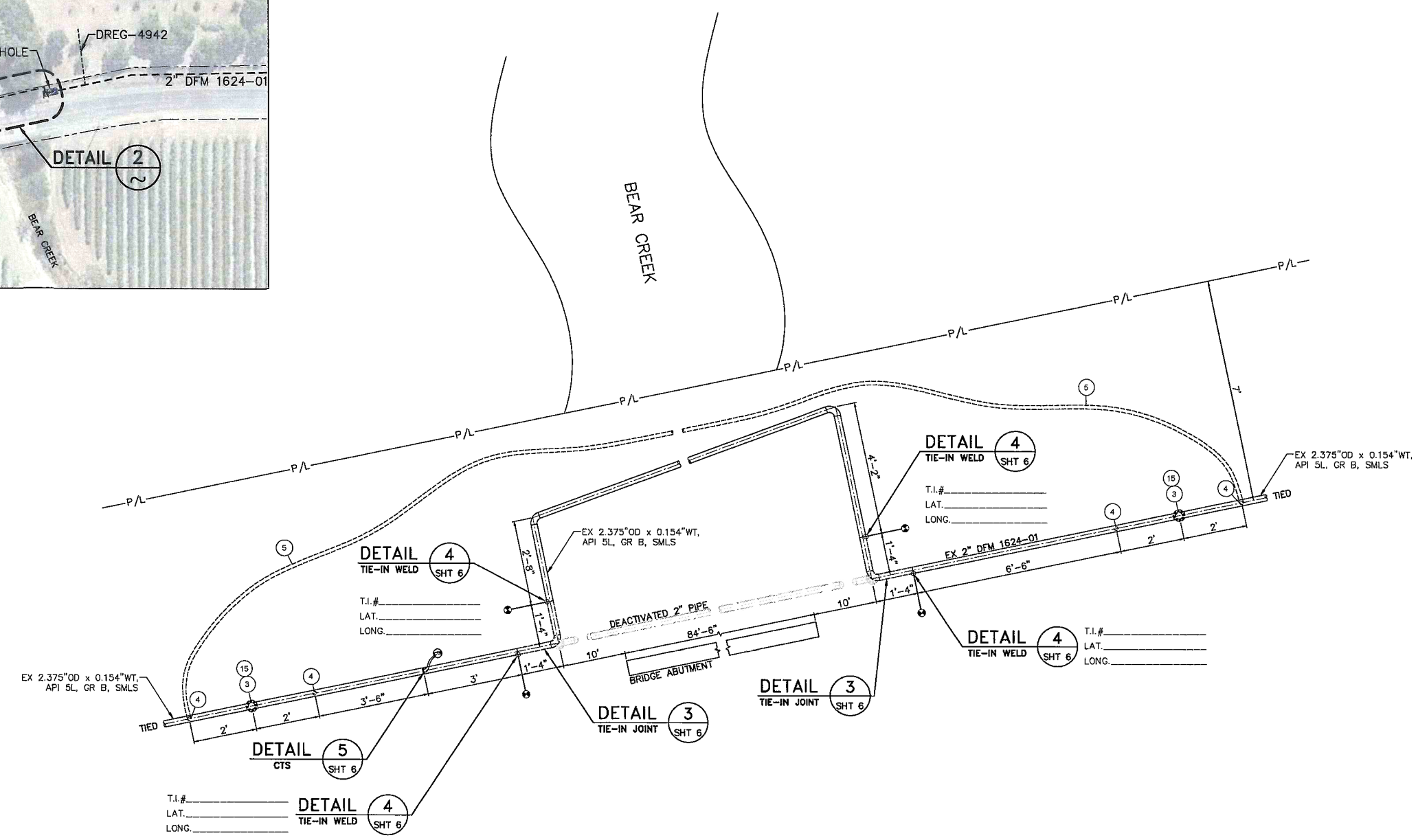

DETAIL 2

SCALE: 1/2" = 1'

DFM 1624–01 PCF REMOVAL & REPLACEMENT

ATKINS RD NORTH OF RODEO DR

JOB NO. 31033842

BOM # 1

DESIGN CRITERIA

LOCATION CLASS 2

DESIGN FACTOR 0.60

FDP 720 PSIG 15.86 % SMYS

MAOP 720 PSIG 15.86 % SMYS

STRENGTH TEST PRESSURE

MAX. 1784 PSIG 39.30 % SMYS

MIN. 1584 PSIG 34.90 % SMYS

4085 PSIG=90% SMYS

TEST MEDIUM NITROGEN

PIPE SPEC API 5L, GR B, SMLS

O.D. 2.375"

W.T. 0.154"

WELD INSPECTION (GAS STD.D–40)*

☐ RADIOGRAPHIC:

☐ 20% MIN. (% OF EACH WELDER'S DAILY WORK)

☐ 100%

*VISUALLY INSPECT 100% OF ALL WELDS THAT ARE NOT RADIOGRAPHICALLY INSPECTED. (THIS REQUIREMENT APPLIES EVEN IF NO RADIOGRAPHIC INSPECTION IS REQUIRED.)

GM 462916 (1971)

EXIST PIPE SPECS
HEADER SIZE: 2.375"
PIPE SPECS: API 5L, GR B, SMLS
WALL THICKNESS: 0.154"
PRESENT MAOP: 388
% SMYS @ MAOP: 8.55

MAXIMUM ALLOWABLE PRESSURE DURING WELDING (G.S.&S. D–22)

EVALUATE THE FOLLOWING OPERATING PRESSURES AND CHOOSE TO DETERMINE THE MAXIMUM ALLOWABLE PRESSURE PERMITTED DURING WELDING

A) (388 PSIG) WHEN WELDING ON BODY OF THE PIPE UNLESS.

B) (388 PSIG) WHEN WELDING WITHIN 3" OF THE LONGITUDINAL SEAM EXCEPT LONGITUDINAL SEAM WELDING TO AND ANY BRANCH BLOCK OR WITHIN 3" OF ANY DEFECT (GOUGES, CORROSION, LAMINATIONS, ETC.) ON THE PIPE WHICH EXCEEDS A 12" LINE INSPECTION WALL THICKNESS (IN DEPTH AND/OR 1/4 OF THE NOMINAL PIPE DIAMETER IN LENGTH.

COPY

SAFETY

SAFETY PLEDGE

I ALWAYS PUT SAFETY FIRST.

I LOOK FOR AND ACT TO RESOLVE UNSAFE SITUATIONS.

I HELP AND ENCOURAGE OTHERS TO ACT SAFELY.

GTS

575 Lennon Ln. #250
Walnut Creek, CA (925) 478-8530
www.gtsinc.us

Project No. 13250

REGISTERED PROFESSIONAL ENGINEER
MARK A. CABRAL
No. M26602
Exp. 9-30-14
MECHANICAL
STATE OF CALIFORNIA

UNDERGROUND SERVICE ALERT
USA
CALL BEFORE YOU DIG
CALL: 811

NOTIFIED U.S.A.

DATE TICKET NO. BY

WELDING INSPECTED PER PG&E GAS STANDARD D–40

VISUAL ☐

MAGNETIC PARTICLE ☐

INSPECTOR

DATE

NOTE:
WARNING: CONFIDENTIAL, PROPRIETARY INFORMATION THIS DOCUMENT CONTAINS CONFIDENTIAL, PROPRIETARY INFORMATION THAT IS THE SOLE PROPERTY OF PACIFIC GAS AND ELECTRIC COMPANY AND IS INTENDED FOR USE ONLY BY AUTHORIZED PACIFIC GAS AND ELECTRIC COMPANY EMPLOYEES & AGENTS. COPYRIGHT PACIFIC GAS AND ELECTRIC COMPANY.

NO.	DATE	DESCRIPTION	GM/SPEC	DWN	CHKD	SUPV	APVD BY
0	11/21/13	ISSUED FOR CONSTRUCTION	31033842	MJM		RAA	MAC

REVISIONS

APPROVED BY	GM 31033842
RAA	SUPV
	DSGN
	DWN MJM
	CHKD RAA
	OK MAC / MAC
	DATE 11–21–13
MAC	SCALES AS SHOWN

PIPING – SECTIONS & DETAILS

REPLACE 4 PCF's @ BEAR CREEK

DFM 1624–01, MP'S 0.36, 0.38, 0.64, 0.66

LOCKEFORD, CALIFORNIA

PACIFIC GAS AND ELECTRIC COMPANY

SAN RAMON, CALIFORNIA

BILL OF MATL. SHEET 06

DWG LIST

SUPSDS

SUPSD BY

SHEET NO. 05 OF 06 SHEETS

31033842 | 0

BILLS OF MATERIAL

PG&E Material Code	Item Number	Quantity	Description	Catalog or DWG. REF. PO Number	Other Data
M010147	1	15'	Pipe, Steel, 2.375" OD, 0.154" WT, API 5L, Grade B, SMLS, Wrapped, Manufactured per PG&E Specification EMS #4120	GS&S A-15	
M022136	2	4	Elbow, Pipe, Steel, 2.375" OD, 0.154" WT, Grade B, 90 degree, Long Radius, Weld Ends Beveled to match 0.237" WT Grade B pipe, Manufactured per ANSI B-16.9 and ASTM A234	GS&S B-20	
M022023	3	4	PCF, 2" Muller Line Stopper Fitting, H-17156, 1440 psig Pressure Rating, 350 psig Max Stopping Pressure.	GS&S C-15.2	
M022287	4	8	Save-A-Valve Nipple, 1" Mueller H-17491	GS&S C-14	
-	5	130'	Flex Hose, 1" High Pressure Stainless Steel Braided		
M560691	6	1	Coupon Test Station	GS&S O-10.2	
M562324	7	4	Handy Cap, Royston 4" x 4", 24 Per Carton	GS&S E-27	
M130850	8	1	Liquid Adhesive, Royston Roybond 747, 16oz Spray Can, 12 Per Carton	GS&S E-27	
M294991	9	500'	Wire, 500' Coil #10, HMWPE with 47 Mil Thickness, 600 Volts, Solid Copper, Black Insulation	GS&S O-10	
M159260	10	4	Cartridges, Cadweld CA-15, or Thermoweld 15P, 15-Gram, 20 Per Box	GS&S O-10	
M303755	11	4	Sleeve, Copper, Thermoweld A200 or Equivalent	GS&S O-10	
M379947	12	48'	Warning Tape, Gas Pipeline Underground, 6" x 1000'	GS&S L-16	
M569390	13	1	Test Lead Box, Big Fink, 5-Terminal (Orange)	GS&S O-10.1	
M360305	14	1	Conduit, 3" PVC, Schedule 80, for "Big Fink", with Two Gas Pipeline Warning Decals	GS&S O-10.1	
M374944	15	4	Electronic Maker Ball, Gas, Yellow	GS&S M-60	

JOB NO. 31033842
BOM # 1

DESIGN CRITERIA
LOCATION CLASS 2
DESIGN FACTOR 0.60
FDP 720 PSIG 15.86 % SMYS
MAOP 720 PSIG 15.86 % SMYS
STRENGTH TEST PRESSURE
MAX. 1784 PSIG 39.30 % SMYS
MIN. 1584 PSIG 34.90 % SMYS
4085 PSIG=90% SMYS
TEST MEDIUM NITROGEN
PIPE SPEC API 5L, GR B, SMLS
O.D. 2.375"
W.T. 0.154"
WELD INSPECTION (GAS STD.D-40)*
☐ RADIOGRAPHIC:
☐ 20% MIN. (% OF EACH WELDER'S DAILY WORK)
☐ 100%
*USUALLY INSPECT 100% OF ALL WELDS THAT ARE NOT RADIOGRAPHICALLY INSPECTED. (THIS REQUIREMENT APPLIES EVEN IF NO RADIOGRAPHIC INSPECTION IS REQUIRED.)

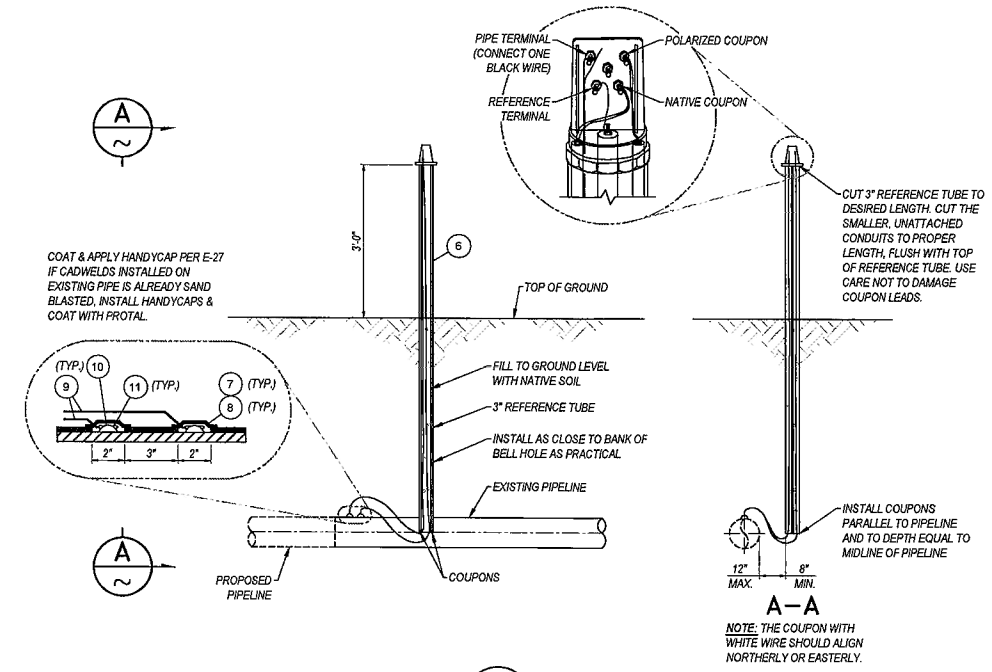

DETAIL 5 SHT 4 — COUPON TEST STATION — GS&S O-10.2
NOT TO SCALE

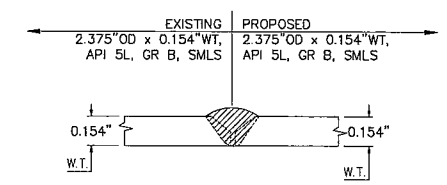

DETAIL 4 SHTS 4&5 — GS&S D-22 FIG. 2 (TYP)
SCALE: NOT TO SCALE

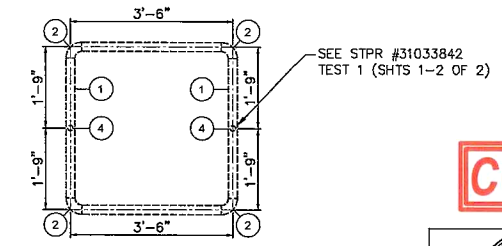

DETAIL 3 SHTS 4&5 — TIE-IN JOINT TEST LOOP
SCALE: 1/2" = 1'

COPY

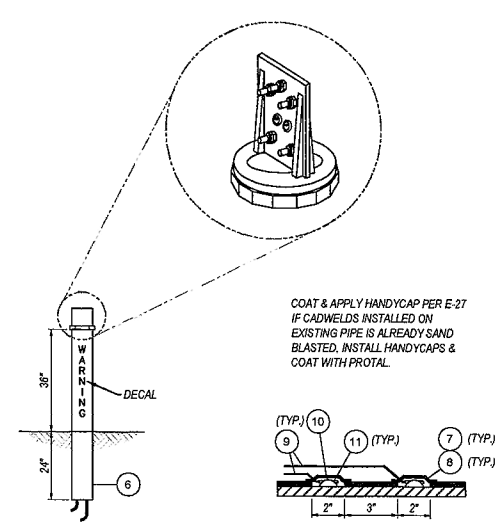

DETAIL 6 SHT 4 — ETS TYPE A-BIG FINK — GS&S O-10.1, FIG. 2 & O-10, FIG. 1
NOT TO SCALE

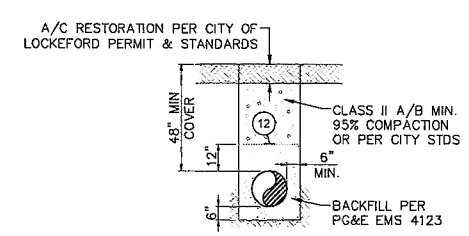

DETAIL — TYPICAL TRENCH — PAVED AREA
NOT TO SCALE

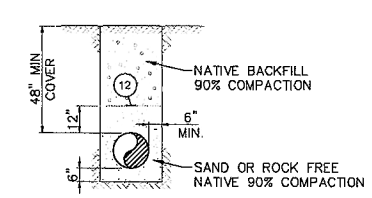

DETAIL — TYPICAL TRENCH — NON-PAVED AREA
NOT TO SCALE

SAFETY
SAFETY PLEDGE
I ALWAYS PUT SAFETY FIRST.
I LOOK FOR AND ACT TO RESOLVE UNSAFE SITUATIONS.
I HELP AND ENCOURAGE OTHERS TO ACT SAFELY.

GTS
575 Lennon Ln. #250
Walnut Creek, CA (925) 478-8530
www.gtsinc.us
Project No. 13250

REGISTERED PROFESSIONAL ENGINEER
MARK A. CABRAL
No. M26602
Exp. 2-30-14
MECHANICAL
STATE OF CALIFORNIA

UNDERGROUND SERVICE ALERT USA
CALL: 811 BEFORE YOU DIG

NOTIFIED U.S.A.
DATE TICKET NO. BY

WELDING INSPECTED PER PG&E GAS STANDARD D-40
VISUAL ☐
MAGNETIC PARTICLE ☐
INSPECTOR
DATE

NOTE:
WARNING: CONFIDENTIAL, PROPRIETARY INFORMATION
THIS DOCUMENT CONTAINS CONFIDENTIAL, PROPRIETARY INFORMATION THAT IS THE SOLE PROPERTY OF PACIFIC GAS AND ELECTRIC COMPANY AND IS INTENDED FOR USE ONLY BY AUTHORIZED PACIFIC GAS AND ELECTRIC COMPANY EMPLOYEES & AGENTS. COPYRIGHT PACIFIC GAS AND ELECTRIC COMPANY.

NO.	DATE	DESCRIPTION	GM/SPEC	DWN	CHKD	SUPV	APVD BY
0	11/21/13	ISSUED FOR CONSTRUCTION	31033842	MJM		RAA	MAC

REVISIONS

APPROVED BY	GM 31033842
RAA	SUPV
	DSGN
	DWN MJM
	CHKD RAA
	OK MAC MAC
	DATE 11-21-13
MAC	SCALES AS SHOWN

PIPING – SECTIONS & DETAILS
REPLACE 4 PCF's @ BEAR CREEK
DFM 1624-01, MP'S 0.36, 0.38, 0.64, 0.66
LOCKEFORD, CALIFORNIA

PACIFIC GAS AND ELECTRIC COMPANY
SAN RAMON, CALIFORNIA

BILL OF MATL SHEET 06
DWG LIST
SUPSDS
SUPSD BY
SHEET NO. 06 OF 06 SHEETS

31033842 0